厦门宏发电力电器有限公司
Xiamen Hongfa Electric Power Controls Co.,Ltd.

电话 Tel:（86）-592-6682878
传真 Fax:（86）-592-6150698
网址 Web site:www.hf-relay.com

产品规格书

Specification

文件编号 File No.：4588669GGS004

产品名称 Product Name: 直流继电器 DC RELAY

产品型号 Product model: HFE80V-200/XXX-XX-HTC5X

发布日期 Publish Date: 2018 年 03 月 09 日 March 09st, 2018

生产工厂 Production Plant: 厦门宏发电力电器有限公司
Xiamen Hongfa Electric Power Controls Co.,Ltd

版本 Version: c

宏发审批签字 Signature by Hongfa			顾客确认 Custom Approval
拟制 Make	审核 Check	批准 Approved	负责人 By:
18.3.8	2018.3.8		日期 Date:

特别说明:
1. 此规格书请顾客在 2 周内确认，如未在规定时间内答复，则视为同意。
2. 自提供规格书之日起 2 年内，顾客没有下单订货，本规格书失效。
Especially claim:
1. This specification is expected to be checked within 2 weeks. Without feedback after 2 weeks, Hongfa will take it as granted that customer approves of this specification.
2. This specification will be invalid if no order within 2 years.

变更履历 Revisions Record

顾客 Customer		产品型号 Part No.		
变更版 Version No.	变更日期 Change Date	变更内容 Description	原因 Reason	负责人 By
a	2017.6.5	新增 Creation	新增 Creation	陈松生 Songsheng Chen
b	2017.12.19	更新规格书版式 Update the specification format	更新规格书版式 Update the specification format	蓝城 Cheng Lan
		13.1 外形图 Outline dimensions：增加公差 Increase tolerance	新增 Creation	
		14.3.8 建议铜排孔径 the aperture of copper bus bar	新增 Creation	
c	2018.3.8	更新规格书版式 Update the specification format	更新规格书版式 Update the specification format	蓝城 Cheng Lan
		13.1 外形图 Outline dimensions：增加放大图与重量 Increase the magnification and weight	新增 Creation	

HFE80V-200 规格书

HFE80V-200 Relay Specification

1 线圈额定参数 Coil Rating

at -40 ℃ ～ 85 ℃

额定电压 Rated Voltage Vd.c.	动作电压 Operate Voltage Vd.c.	释放电压 Release Voltage Vd.c.	线圈电阻 Coil Resistance Ω（at 23℃）	线圈功耗 Coil Power W（at 23℃） 大约 Approx.
12	≤9	≥1	28.8×(1±7%)	6
24	≤18	≥2	115.2×(1±7%)	6

2 触点参数 Contact Specification

2.1 触点形式 Contact Arrangement: 1 组常开 1 H Form A

2.2 触点材料 Contact Material: 铜合金 Copper Alloy

2.3 接触电阻 Contact Resistance: ≤1 mΩ (at 20 A)

2.4 触点额定负载 Contact Rating: 200 A （60 mm^2 wire ）

2.5 最大分断电流 Max. Breaking Current: 400 A

2.6 最大切换电压 Max. Switching Voltage: 250 Vd.c.

2.7 最小适用负载 Min. Applicable Load: 6 Vd.c. 1 A

2.8 电流耐受 Current Endurance

电流	时间
200A	持续/Cont.
300 A	5min
400 A	30 s
800 A	10 s
1600A	1 s

电流耐受条件 Condition for current endurance

1) 环境温度 Ambient temperature：85 ℃；

2) 线圈激励电压为线圈额定电压；Supply rated voltage to coil；

3) 使用 60 mm^2 以上线径铜导线连接。The cross section area of wire is 60 mm^2.

3 耐久性 Endurance

3.1 电耐久性 Electrical Endurance

产品型号 Product model	结构型式 Version	环境温度 Ambient Temperature	触点负载 Contact Rating	通断比 ON：OFF	电耐久性 Electrical Endurance
HFE80V-200	一组常开 1 H	常温 Room Temperature	接通 Making: （冲击 Inrush 400A，RC=1ms） 稳态 Steady 200A 触点电压 Contact Voltage 10 Vd.c.	0.6 s:5.4 s	7.5×10^4次 (ops)
			切换 Switching: 稳态 Steady 40A 触点电压 Contact Voltage 200 Vd.c.	0.6 s:5.4 s	1×10^4次 (ops)
			切换 Switching: 稳态 Steady 100A 触点电压 Contact Voltage 200 Vd.c.	0.6 s:5.4 s	5000次 (ops)
			切换 Switching: 稳态 Steady 150A 触点电压 Contact Voltage 200 Vd.c.	0.6 s:5.4 s	1500次 (ops)
			切换 Switching: 稳态 Steady 200A 触点电压 Contact Voltage 200 Vd.c.	0.6 s:5.4 s	500次(ops)
			分断 Breaking: 稳态 Steady 200A 触点电压 Contact Voltage 150 Vd.c.	0.6 s:5.4 s	3000次 (ops)
			分断 Breaking: 稳态 Steady 400A 触点电压 Contact Voltage 200 Vd.c.	0.6 s:5.4 s	50次 (ops)

电流耐受条件 Condition for current endurance

1) 环境温度 Ambient temperature：85 ℃；
2) 线圈激励电压为线圈额定电压；Supply rated voltage to coil；
3) 使用 60 mm^2 以上线径铜导线连接。The cross section area of wire is 60 mm^2.

3.2 机械耐久性 Mechanical Endurance

结构型式 Version	触点负载 Contact Rating	环境温度 Ambient Temperature	通断比 ON：OFF	机械耐久性 Mechanical Endurance
一组常开 1 H	1A/6Vd.c.	常温 Room Temperature	0.25 s:0.25 s	2×10^5 次（ops）

4 绝缘电阻 Insulation Resistance

4.1 试验前 Before test

断开触点电路的各引出端之间 Between open contacts: 1000 MΩ (500 Vd.c.)
触点引出端与线圈引出端之间 Between contact and coil: 1000 MΩ (500Vd.c.)

4.2 试验后 After test

断开触点电路的各引出端之间 Between open contacts: 50 MΩ (500 Vd.c.)
触点引出端与线圈引出端之间 Between contact and coil: 50 MΩ (500 Vd.c.)

5 介质耐压 Dielectric Strength (漏电流 Leak Current:1 mA)

5.1 试验前 Before test

断开触点电路的各引出端之间 Between open contacts: 3000 Va.c.(50/60 Hz 1 min)
触点引出端与线圈引出端之间 Between contact and coil: 4000 Va.c. (50/60 Hz 1 min)

5.2 试验后 After test

断开触点电路的各引出端之间 Between open contacts: 2250 Va.c. (50/60 Hz 1 min)
触点引出端与线圈引出端之间 Between contact and coil:3000 Va.c.(50/60 Hz 1 min)

6 时间参数 Time(额定电压下 At Rated Voltage)

6.1 动作时间 Operate Time: ≤30 ms。
6.2 释放时间 Release Time: ≤10 ms。
6.3 回跳时间 Bounce Time: ≤5 ms。

7 振动 Vibration

7.1 正弦振动 Sinusoidal Vibration

正弦振动,1.5 mm 双振幅，10 Hz～500 Hz，加速度 49 m/s^2,三个相互垂直轴线的每一个方向 8 h（激励和非激励各 4 h）,共 24 h。继电器外观、结构和性能不应有异常。Sinusoidal vibration，1.5 mm double amplitude ,10 Hz to 500 Hz, acceleration 49 m/s^2, 8 hours each for both directions on of three mutually perpendicular axes,4 hours each for the energized and non-energized status ,total 24 hours. There shall not be any abnormalities on relay appearance, construction and performance.

8 冲击 Shock

8.1 稳定性 Functional

196 m/s^2（脉冲持续时间 11 ms），3000 次(三个相互垂直轴线的每一个方向 500 次，激励和非激励各 250 次)，闭合回路的断开或开路回路的闭合时间应不超过 10 μs。196 m/s^2, duration 11ms, 500 ops for each direction of three mutually perpendicular axes, 250 ops each for the energized and non-energized status, total 3000 shocks. The opening time for close contacts or the closing time for open contacts should not exceed 10μs.

8.2 强度 Destructive

490 m/s^2（脉冲持续时间 6 ms），300 次(三个相互垂直轴线的每一个方向 50 次)继电器外观、结构和性能不应有异常。490 m/s^2, duration 6 ms, 50 shocks for each directions of three mutually perpendicular axes, total 300 shocks . There shall not be any abnormalities on relay appearance, construction and performance.

9 标准测试条件 Standards Test Condition

9.1 温度 Temperature: 23 ℃±5 ℃

9.2 湿度 Humidity: 25 % ～ 75 % RH

9.3 方向 Direction of Measurement: 任意 Random

10 使用条件 Operating Condition

10.1 温度 Temperature: -40 ℃ ～ 85 ℃

10.2 湿度 Humidity: 5 % ～ 85 % RH

10.3 安装方向 Mounting Direction: 任意 Random

注：使用环境条件不能导致继电器内部产生结露、结冰，否则会导致继电器失效

Note:The ambient environment of application shall not cause any dewing or icing inside the relay. Otherwise, the relay may fail to work consequently.

11 贮存条件 Storage Condition

11.1 温度 Temperature: -40 ℃ ～ 85 ℃

11.2 湿度 Humidity: 5 % ～ 85 % RH

12 订货标记 Ordering Information

HFE80	V	- 200 / 200 -	12 -	H	T	C	5	Y	(XXX)
①	②	③	④	⑤	⑥	⑦	⑧	⑨	⑩	⑪

① 产品型号 Type	HFE80
② 应用场合 Application	V：新能源汽车领域 Vehicle 无（Nil）：新能源电源控制 New energy power control
③系列代号 Series Code	200：200 A
④负载电压 Lode Voltage	150：150 Vd.c. 200：200 Vd.c.
⑤ 线圈电压 Coil Voltage	12:12 Vd.c. 24:24 Vd.c.
⑥ 触点形式 Contact Type	H: 一组常开 1 Form A
⑦ 触点材料 Contact Material	T: $AgSnO_2$
⑧ 线圈引出端形式 CoilTermination	C: 连接器 Connector
⑨ 负载引出端形式 Load Termination	5：内螺纹安装 Screw Terminal
⑩ 安装形式 Coil Sort	Y：卧式安装 Y：Horizontal fixing 无（Nil）：立式安装 Vertical fixing
⑪特殊特性号 Special Code	XXX:客户特性号 Customer characteristic number

13 产品结构 Configuration

13.1 外形图 Outline dimensions：

立式安装Vertical fixing：HFE80V-200/XXX-XX-HTC5(XXX)

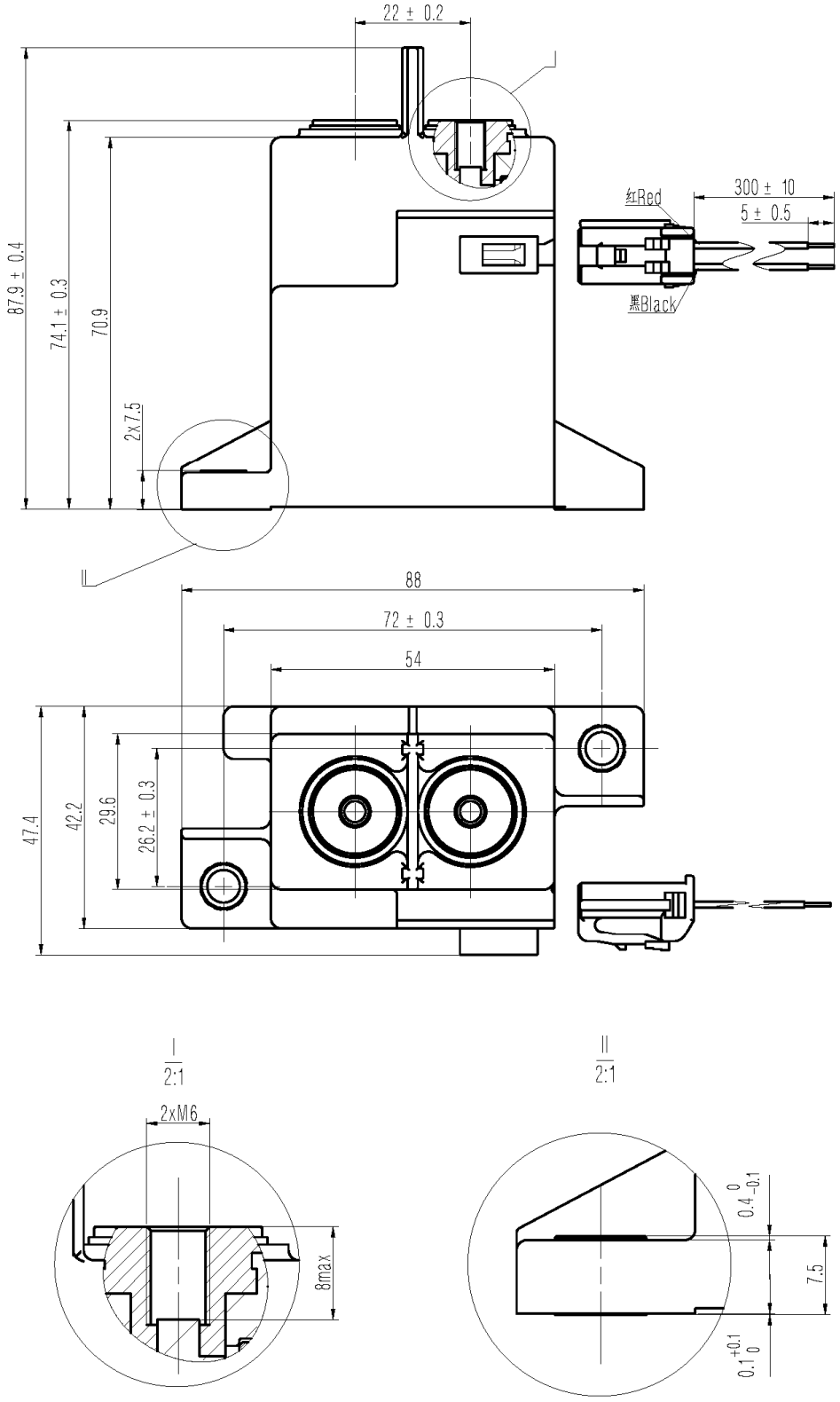

卧式安装 Horizontal fixing：HFE80V-200/XXX-XX-HTC5Y(XXX)

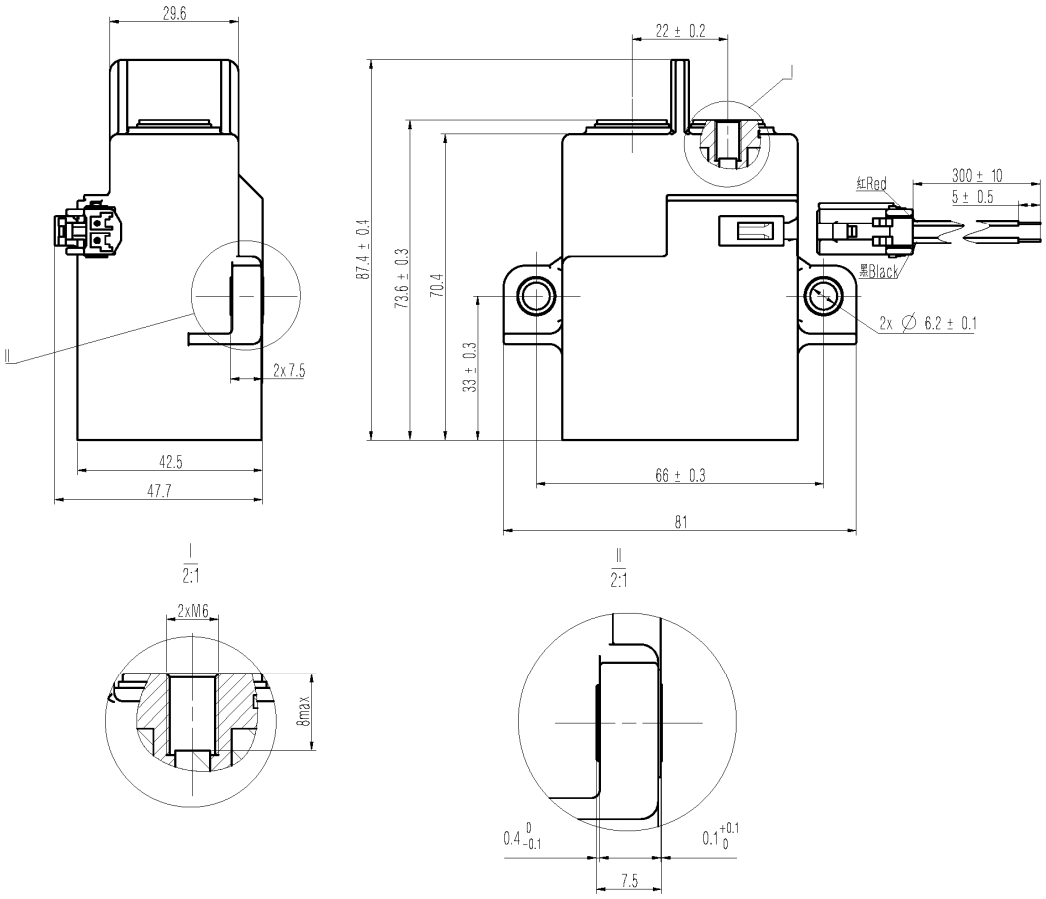

线圈引出形式Coil terminal

C:连接器编号-天海 connector-Tianhai：0435308

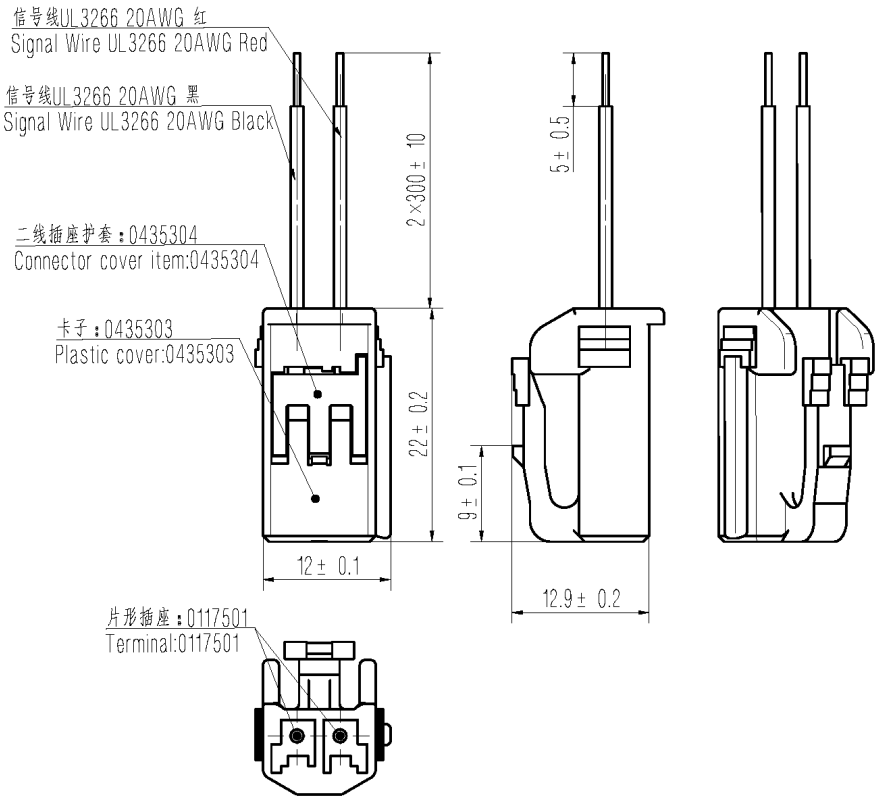

产品型号 Product model	重量 Unit Weight
HFE80V-200/XXX-XX-HTC5	约 Approx.370g
HFE80V-200/XXX-XX-HTC5Y	约 Approx.370g

13.2 接线图 Wiring Diagram

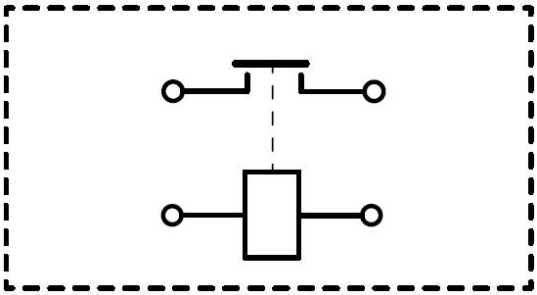

备注：负载、线圈均无极性 No polarity on the load and coil

注：产品外形尺寸未注尺寸公差按下表执行。

Note: All unspecified tolerance according to following table.

产品外形尺寸未注尺寸公差 Outline dimensions hadn't specified tolerance	
外形尺寸 Outline Dimensions	公差 Tolerance
≤10	±0.3
＞10～50	±0.5
＞50	±0.8

14 其他说明 Others

14.1 供应商 Supplier

厦门宏发电力电器有限公司 Xiamen Hongfa Electric Power Controls Co., Ltd.

14.2 规格书内的各项性能参数是基于标准测试条件下测得的初始值。All the performance data listed in the data sheet are the initial values tested under standard testing condition.

14.3 注意事项 Notes

14.3.1 对宏发而言，不可能评定继电器在每个具体应用领域的所有性能参数要求，因而客户应根据具体的使用条件选择与之相匹配的产品，若有疑问，请与宏发联系，以便获取更多的技术支持；但产品选型责任仅由客户负责。We could not evaluate all the performance and all the parameters for every potential application. The customer can choose the right product according to the specific usage

conditions and requirements.If there is any queries, please contact Hongfa for the technical service. However, customer will responsible for what they choose and it is the user's responsibility to determine which product should be used.

14.3.2 我司承诺的负载,在没有特别说明时，均指额定负载，产品使用于我们承诺的负载条件之外时，我公司不承担因此造成的失效责任。Without special note ,our commitment to the load means rating load .Hongfa doesn't response for any usage beyond our guarantee.

14.3.3 触点额定值均为阻性负载时的数值，使用 L/R≥1 ms 的感性负载（L 负载）的情况下，请与感性负载并行采取浪涌吸收措施。未采取措施的情况下，可能会造成电气寿命下降、发生切断不良。The rating load of contact is resistive load. Please take measures of surge absorption device together with inductive load when using the L/R≥ 1ms inductive load (L Load).otherwise it may lead to the decrease of electrical endurance and defective switch.

14.3.4 为抑制继电器线圈的反向电动势，建议加装非线性电阻（推荐使用可变电阻,最大能量耐量：1J 以上；电压：额定电压的 1.5～2 倍）。若使用二极管，会使继电器释放时间大大加长，肯定会导致切断性能下降，敬请注意。In order to curb the reverse electromotive force of coil, a nonlinear resistor is recommended to use（ZNR is recommended，the max energy tolerance:≥1J; Voltage: 1.5～2 times the rated voltage）. Please be noted that a diode will make the release time of relay increase, which should lead to the degradation of cutting-off capability.

14.3.5 请避免在强磁界（变压器、磁铁的周围）和发热物体的附近安装。Please avoid installation in strong magnetic field(around the transformers、the magnet)and the heating objects nearby.

14.3.6 为防止出现松动，继电器安装时请使用垫圈。继电器安装处请使用 M5 螺钉，螺钉锁紧扭矩请控制在 3 N▪m～4 N▪m；引出端安装处的螺母锁紧扭矩请控制在 6N•m～8N•m，在超过范围的情况下，可能会造成破损。In order to prevent loosening, please use the washer when installing the relay. Please use the M5 screws to install relay, screw locking torque within 3 N▪m～4 N▪m; Make sure he lock nut torque of the terminal installation is within 6N▪m～8N▪m. Damage may occur when it is beyond the range.

14.3.6.1 使用M5螺钉时，确保垫圈厚度和强度足够，否则会变形，撑破外壳。When use M5 screw, make sure the steel ring's thickness and strength are enough. Otherwise it will be out of shape, and the case will be broke.

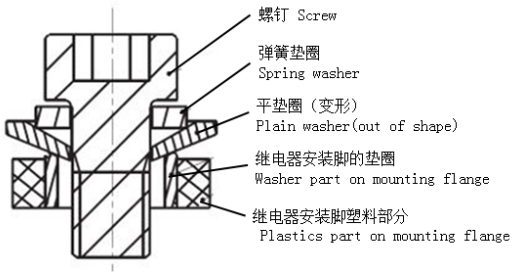

14.3.7 请避免在引出片上粘附油脂等异物，请使用 60 mm^2 以上规格的连接导线，否则有可能会造成引出端部分的异常发热。Please avoid grease and other foreign matter in the terminal，please use the connecting wire with a cross section area ≥ 60mm^2,or they may cause abnormal heating in the terminal part .

14.3.8 注意连接铜排的厚度和扭矩大小，若超出下表建议的数值，会造成螺纹滑牙或安装不紧的问题。Please pay attention to the thickness of copper bars and the value of the torque. If it goes beyond the recommended values in the below table , it will cause thread slide or installation is not tight. For this case.

负载引出端螺钉大小 Screw on load terminal	建议铜排厚度 The thickness of copper bus bar	建议铜排孔径 the aperture of copper bus bar	扭矩大小 Torque
M6	2mm～3mm	（φ6.0～φ6.5）mm	6N·m～8N·m

14.3.9 在继电器引出端上除连接铜排外，不允许增加任何其余线束，否则有可能无法锁紧导致继电器异常发热。Beside copper bus ,no cables are suggested to connector with relay terminals, otherwise relay may overheat due to bad fasten.

14.3.10 在继电器坠落的情况下，原则上请不要再使用。In principle, please do not use it when the relay has fallen down.

14.3.11 环保措施 Environmental Protection

宏发产品均符合 RoHS 要求。Hongfa products are all RoHS compliant.

14.3.12 宏发保留对产品更改的权利，客户在首次下单之前应确认此规格书内容，必要时可要求我司提供新的规格书。Hongfa reserves the right to make changes.Customers should reconfirm the contents of the specification before first orders and ask for us to supply a new specification if necessary.